NOTES:

1. MAINTAIN 2% POSITIVE SLOPE TO AIR RELEASE VALVE.
2. FOR INSTALLATION IN AREAS WITH SIDEWALKS, PLACE AIR RELEASE VALVE BEHIND SIDEWALK

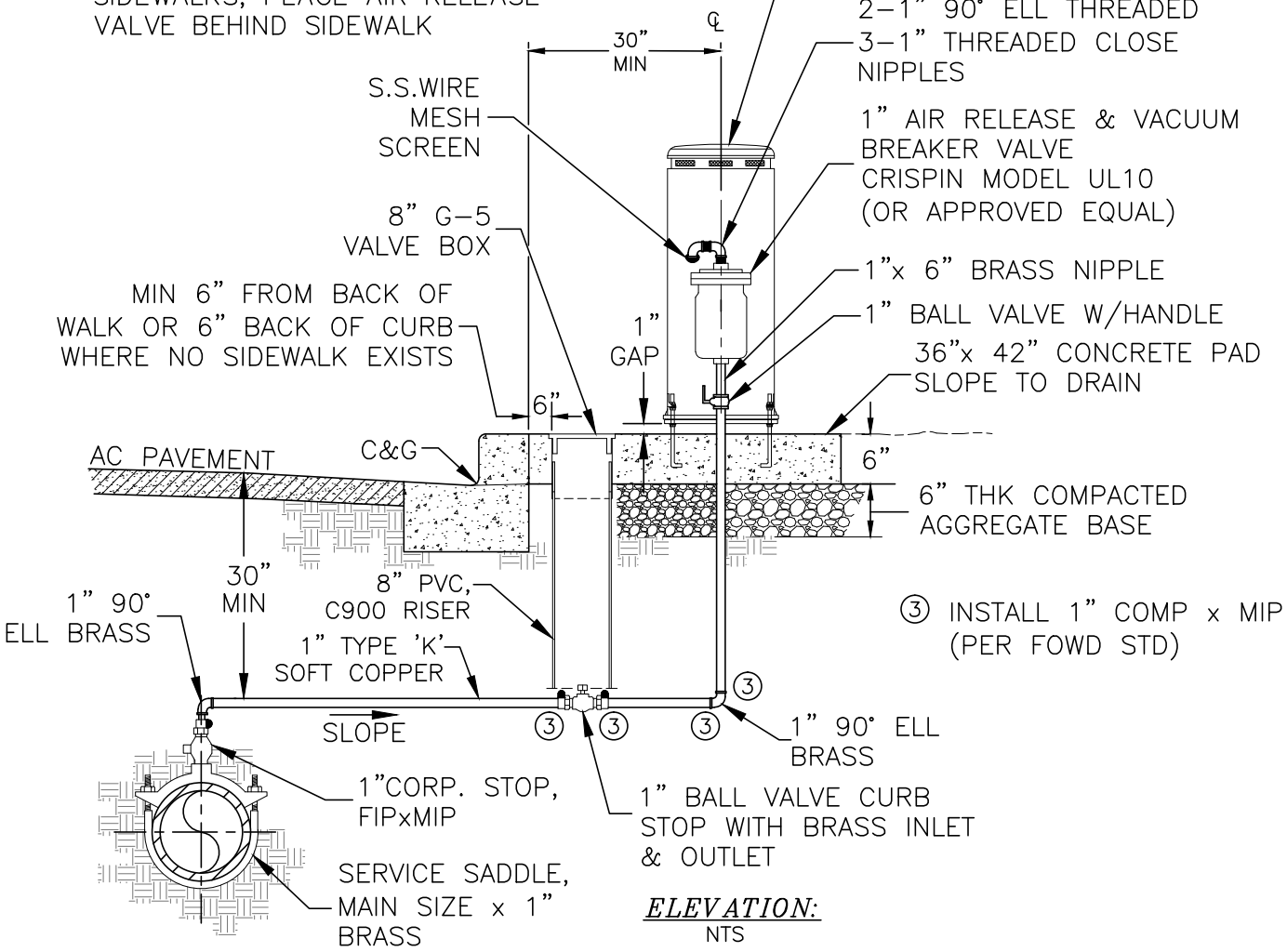

ELEVATION:
NTS

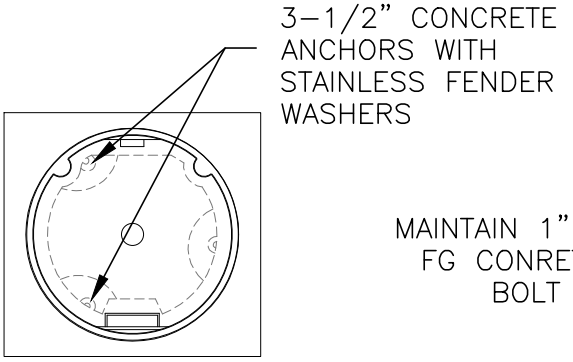

PLAN VIEW
NTS

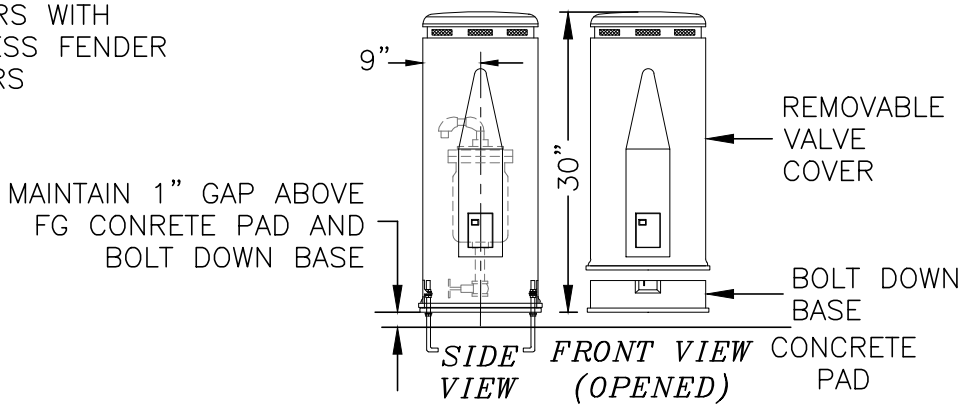

Fair Oaks Water District 10326 FAIR OAKS BLVD, FAIR OAKS, CA 95628-7187 OFFICE (916) 967-5723, FAX (916) 967-0153 WEBSITE: W W W.FOWD.COM	FAIR OAKS WATER DISTRICT	1" AUTOMATIC AIR & VACUUM RELEASE VALVE	APPROVED: M. NISENBOYM DRAWN BY T. EGGAR DRAWING **STD-2-1** REVISED AUG-2013 SCALE N/A
Standard Specifications		Standard Drawing 2-1	

N:\AUTOCAD FILES\AUTOCAD MASTER DWGS\WORKING DWGS\Standard SPEC Dwgs\Std-Dwg FOWD\Dwgs\Std-2-1 (1-inch) AVRV.dwg, 08/14/13 04:27:03pm, teggar