# FAIR OAKS WATER DISTRICT
FAIR OAKS, CALIFORNIA

# SKYWAY WELL
## PROJECT: C19WTSTSTH
## SACRAMENTO COUNTY, CALIFORNIA
## PLANS FOR PRODUCTION WELL DRILLING, DEVELOPMENT AND TESTING

LOCATION MAP
NOT TO SCALE

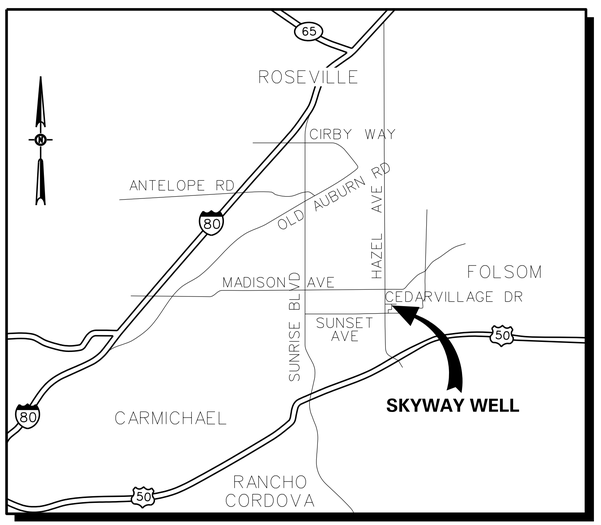


VICINITY MAP
NOT TO SCALE

## GENERAL NOTES

1. THE CONTRACTOR SHALL NOTIFY THE FAIR OAKS WATER (DISTRICT) IMMEDIATELY REGARDING ANY DISCREPANCIES OR AMBIGUITIES WHICH MAY EXIST IN THE PLANS OR SPECIFICATION. THE DISTRICTS INTERPRETATION OR CORRECTION THEREOF SHALL BE CONCLUSIVE.
2. WHERE THE PLANS OR SPECIFICATIONS DESCRIBE PORTIONS OF THE WORK IN GENERAL TERMS BUT NOT IN COMPLETE DETAIL, IT IS UNDERSTOOD THAT ONLY THE BEST GENERAL PRACTICE IS TO PREVAIL AND THAT ONLY MATERIALS AND WORKMANSHIP OF THE FIRST QUALITY ARE TO BE USED.
3. THE CONTRACTOR SHALL BE RESPONSIBLE FOR OBTAINING ALL PERMITS AND LICENSES AND PAYING ALL ASSOCIATED PROJECT FEES REQUIRED FOR THE CONSTRUCTION AND COMPLETION OF THE PROJECT.
4. THE CONTRACTOR SHALL EXERCISE DUE CAUTION AND SHALL CAREFULLY PRESERVE BENCH MARKS, SURVEY REFERENCE POINTS, AND SHALL BEAR ALL EXPENSES FOR REPLACEMENT.
5. PRIOR TO COMMENCING WORK, IT SHALL BE THE CONTRACTOR'S RESPONSIBILITY TO FIELD LOCATE ALL AFFECTED UNDERGROUND UTILITIES MAIN AND SERVICE LINES. THE CONTRACTOR SHALL NOTIFY THE MEMBERS OF THE UNDERGROUND SERVICE ALERT (U.S.A.) 48 HOURS IN ADVANCE OF PERFORMING EXCAVATION WORK BY CALLING THE TOLL-FREE NUMBER (800) 227-2600.
6. THE CONTRACTOR SHALL BE RESPONSIBLE FOR PROTECTING EXISTING IMPROVEMENTS FROM DAMAGE. THE COST OF REPLACING EXISTING IMPROVEMENTS SHALL BE INCLUDED IN THE CONTRACT BID PRICES.
7. CONTRACTOR AGREES THAT IT SHALL ASSUME SOLE AND COMPLETE RESPONSIBILITY FOR JOB SITE CONDITIONS DURING THE COURSE OF CONSTRUCTION OF THIS PROJECT, INCLUDING SAFETY OF ALL PERSONS AND PROPERTY; THAT THIS REQUIREMENT SHALL APPLY CONTINUOUSLY AND NOT BE LIMITED TO NORMAL WORKING HOURS; AND THAT THE CONTRACTOR SHALL DEFEND, INDEMNIFY, AND HOLD THE DISTRICT AND DESIGN ENGINEER HARMLESS FROM ANY AND ALL LIABILITY, REAL OR ALLEGED, IN CONNECTION WITH THE PERFORMANCE OF WORK ON THIS PROJECT.
8. APPROPRIATE DUST CONTROL SHALL BE PROVIDED, AT THE CONTRACTOR'S EXPENSE, TO MINIMIZE ANY DUST NUISANCE.
9. THE CONTRACTOR SHALL BE RESPONSIBLE FOR IMPLEMENTING BEST MANAGEMENT PRACTICES (BMPs) WITH REGARD TO STORM WATER AND NON-STORM WATER MANAGEMENT.
10. ROUTE TO SITE SHALL BE FROM HAZEL AVENUE, CEDARVILLAGE DRIVE EAST, SOUTH ON SKYWAY DRIVE

## SHEET INDEX


| SHEET | TITLE |
|---|---|
| G1.0 | TITLE SHEET |
| G2.0 | SITE PLAN |
| G3.0 | PRODUCTION WELL SECTION & DETAILS |
| G4.0 | BEST MANAGEMENT PRACTICE DETAILS |


FAIR OAKS WATER DISTRICT

APPROVED BY:

TOM GRAY, GENERAL MANAGER
FAIR OAKS WATER DISTRICT

FAIR OAKS WATER DISTRICT · FAIR OAKS · SACRAMENTO COUNTY · CALIFORNIA · ORGANIZED MARCH 26, 1917

DATE: 1-22-2020

REGISTERED PROFESSIONAL ENGINEER · JOHN C. SIMONSEN · No. 26395 · CIVIL · STATE OF CALIFORNIA · EXP. 9-30-20 · 1-21-20

REGISTERED PROFESSIONAL ENGINEER · JOHN C. SIMONSEN · No. 26395 · CIVIL · STATE OF CALIFORNIA · EXP. 9-30-20 · 5-1-20-20

CONSULTING KASL ENGINEERS

murraysmith

FILE: S:\2695-03 Skyway Well\Plan\01_TITLE.dgn
DATE: 1/22/2020

| REVIEWED BY: | DATE: | DESIGNED BY: |
|---|---|---|
| REVIEWED BY: | DATE: | DRAWN BY: |
| REVIEWED BY: | DATE: | CHECKED BY: |
| | | DATE: 1/22/2020 |

| REV. | DATE | DESCRIPTION | APP. |
|---|---|---|---|

FAIR OAKS WATER DISTIRCT
10326 FAIR OAKS BLVD, FAIR OAKS, CA 95628, (916) 967-5723

SKYWAY WELL DRILLING, DEVELOPMENT AND TESTING

**TITLE SHEET**

DATE: DATE Jan 2020
SCALE:
HORIZ: N/A
VERT: N/A
VER.:

FAIR OAKS WATER DISTRICT

SHEET G1.0 OF 1 SHEETS 4
PROJECT NUMBER C19WTSTSTH

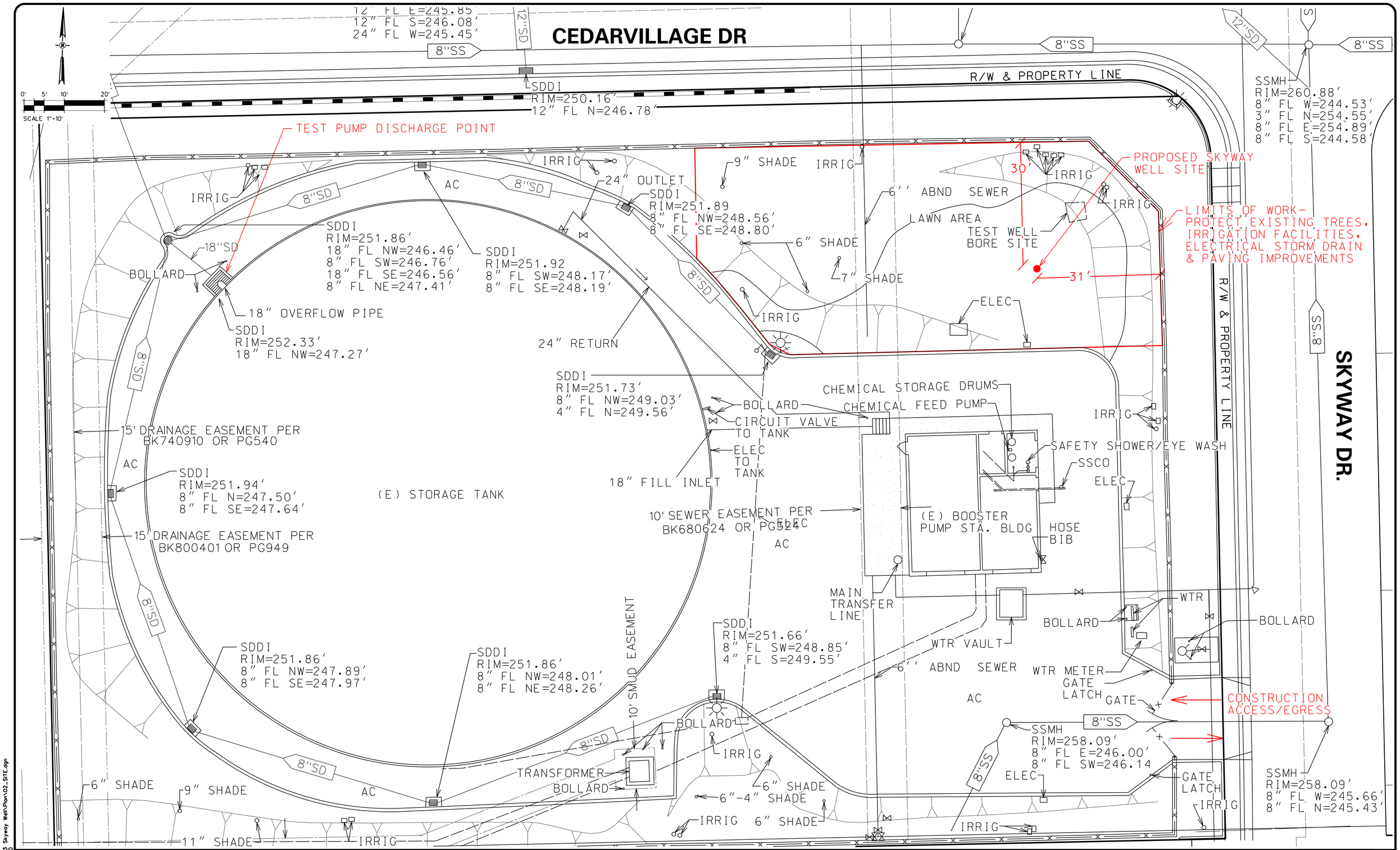


| REVIEWED BY: | DATE: | DESIGNED BY: | REV. | DATE | DESCRIPTION | APP. |
|---|---|---|---|---|---|---|
| REVIEWED BY: | DATE: | DRAWN BY: | | | | |
| REVIEWED BY: | DATE: | CHECKED BY: | | | | |
| | | DATE: 1/22/2020 | | | | |

FAIR OAKS WATER DISTIRCT
10326 FAIR OAKS BLVD, FAIR OAKS, CA 95628, (916) 967-5723

SKYWAY WELL DRILLING, DEVELOPMENT AND TESTING

**SITE PLAN**

DATE: DATE Jan 2020
SCALE:
HORIZ: AS SHOWN
VERT: N/A
VER.:

FAIR OAKS WATER DISTRICT

SHEET G2.0 OF 2 SHEETS 4
PROJECT NUMBER C19WTSTSTH

FILE: S:\2695-03 Skyway Well\Plan\02_SITE.dgn
DATE: 1/22/2020

# FAIR OAKS WATER DISTRICT
## FAIR OAKS, CALIFORNIA

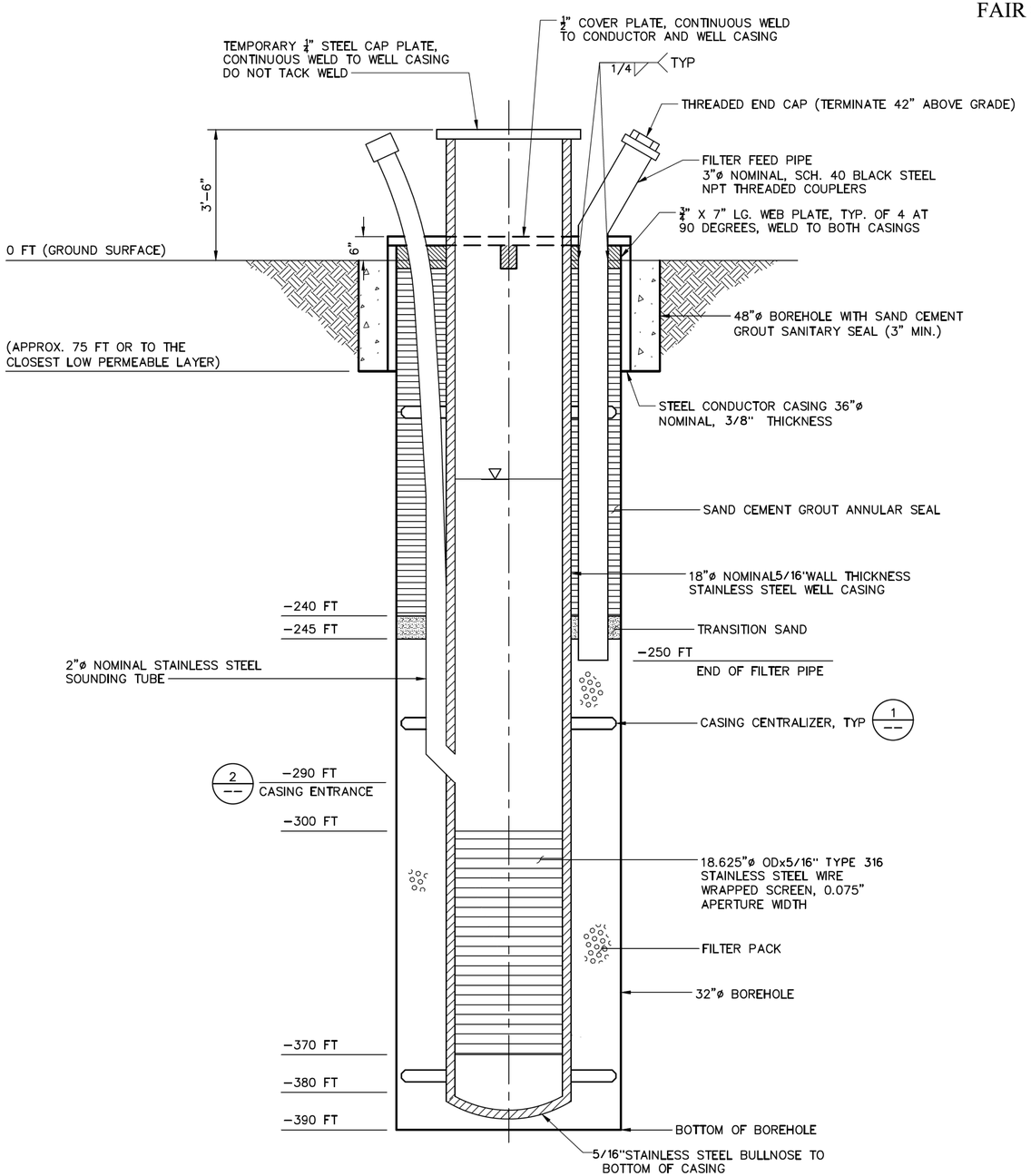


SKYWAY WELL SECTION
NOT TO SCALE

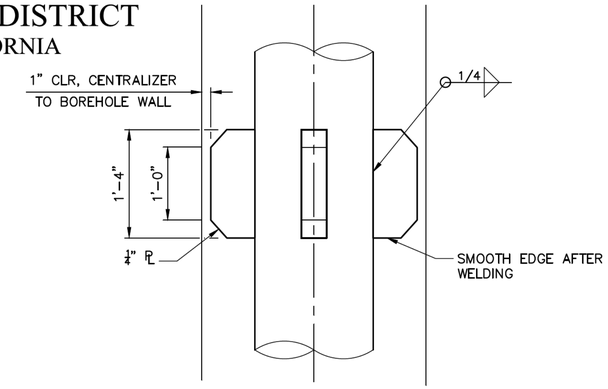


NOTE: INSTALL 3 CENTRALIZERS PER SET AT 120°

CASING CENTRALIZER DETAIL 1 --
NOT TO SCALE

NOTES:

1. THE LOCATION OF WELL SCREEN AND THE TYPE OF FILLER PACK ARE PRELIMINARY GUIDELINES. FINAL DIMENSIONS AND SPECIFICATIONS SHALL BE DETERMINED BY THE DISTRICT'S REPRESENTATIVE FOLLOWING EVALUATION OF TEST HOLE AND SAMPLING WELL RESULTS.
2. DEVELOPMENT AND TESTING WATER SHALL BE DISPOSED OF AT THE TEST PUMP DISCHARGE POINT SHOWN ON SHEET G2.0. THE CONTRACTOR SHALL SUBMIT A PROPOSAL TO THE DISTRICT DESCRIBING THE METHOD OF REMOVING EXCESS SILTS FROM THE WATER PRIOR TO DISPOSAL.
3. THE CONTRACTOR SHALL DECHLORINATE THE DISPOSAL WATER.
4. IF THE CONTRACTOR DETERMINES THAT AN ALL-WEATHER, COMPACTED AGGREGATE BASE DRILLING PAD IS NECESSARY TO CONTINUE DRILLING OPERATIONS, THE CONTRACTOR SHALL BE RESPONSIBLE FOR ALL COSTS AND CONSTRUCTION OF THE DRILLING PAD.

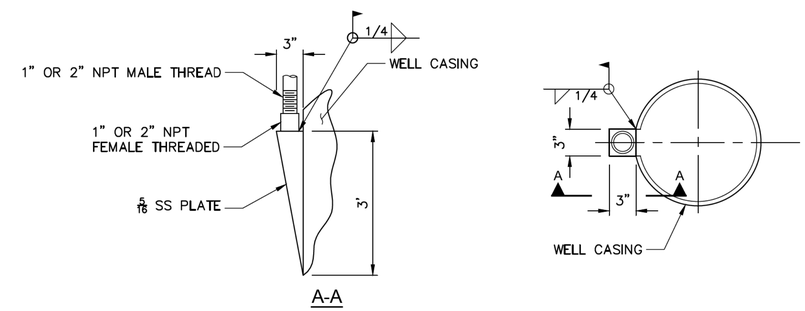


CASING ENTRANCE DETAIL 2 --
NOT TO SCALE

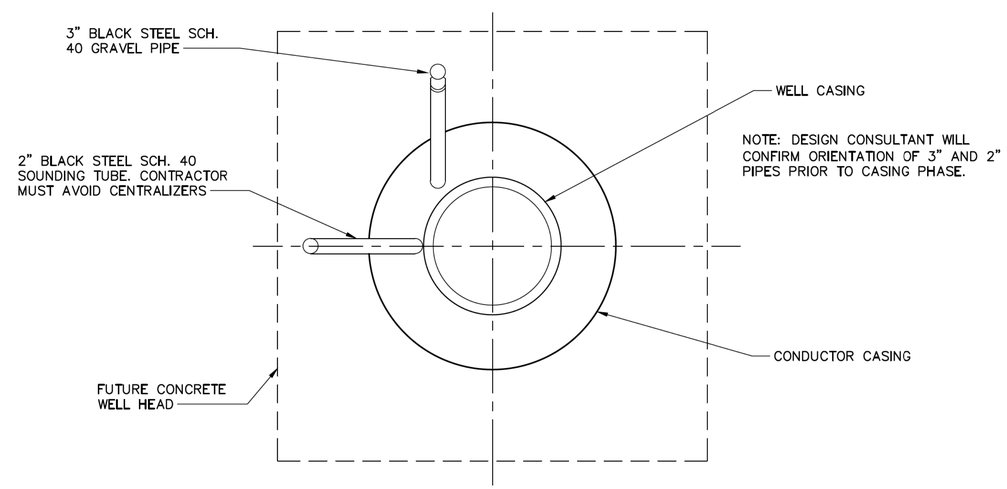


NOTE: DESIGN CONSULTANT WILL CONFIRM ORIENTATION OF 3" AND 2" PIPES PRIOR TO CASING PHASE.

WELL HEAD PLAN 3 --
NOT TO SCALE

CONSULTING KASL ENGINEERS

murraysmith

FILE: S:\2695-03 Skyway Well\Plan\03_SECTION.dgn
DATE: 1/22/2020

| | | | | | | |
|---|---|---|---|---|---|---|
| REVIEWED BY: | DATE: | DESIGNED BY: | | | | |
| REVIEWED BY: | DATE: | DRAWN BY: | | | | |
| REVIEWED BY: | DATE: | CHECKED BY: | | | | |
| | | DATE: 1/22/2020 | REV. | DATE | DESCRIPTION | APP. |

FAIR OAKS WATER DISTIRCT
10326 FAIR OAKS BLVD, FAIR OAKS, CA 95628, (916) 967-5723

SKYWAY WELL DRILLING, DEVELOPMENT AND TESTING

**PRODUCTION WELL SECTION & DETAILS**

DATE: DATE Jan 2020
SCALE:
HORIZ: N/A
VERT: N/A
VER.:

FAIR OAKS WATER DISTRICT

SHEET G3.0 OF 3 SHEETS 4
PROJECT NUMBER C19WTSTSTH

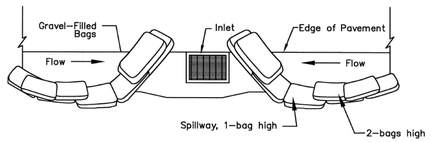


TYPICAL PROTECTION FOR INLET ON SUMP

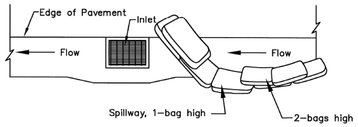


TYPICAL PROTECTION FOR INLET ON GRADE

NOTES:
1. Intended for short-term use.
2. Use to inhibit non-storm water flow.
3. Allow for proper maintenance and cleanup.
4. Bags must be removed after adjacent operation is completed
5. Not applicable without filter fabric in areas with high silts and clays.

## STORM DRAIN INLET PROTECTION CURB INLET INSTALLATION

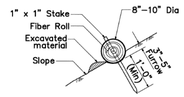


SECTION
TEMPORARY FIBER ROLL

NOTES:
1. Prepare the slope before the wattling procedure is started.
2. Dig small trenches across the slope on contour, to place rolls. The trench should be deep enough to accommodate half the thickness of the roll, when the soil is loose and uncompacted, the trench should be deep enough to bury the roll 2/3 of its thickness because the ground will settle.
3. Install rolls perpendicular to water movement.
4. Start at the bottom of the slope and work up.
5. Construct trench at contour intervals of 12 feet apart.
6. Use straight bar to drive holes through the wattle and into the soil.
7. Make sure no gaps exist between the soil and the straw wattle.
8. Drive the stake through the prepared hole into the soil. Leave only 1 or 2 inches of stake exposed above roll install stake every 4 feet apart through the wattle. Additional stakes may be driven on the downslope side of the trenches on highly erosive or very steep slopes.
9. Runoff must not be allowed to run under or around roll.

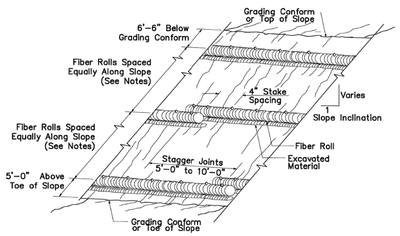


PERSPECTIVE
TEMPORARY FIBER ROLL

## TEMPORARY FIBER ROLL

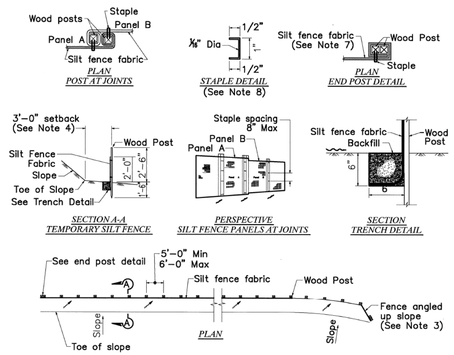


NOTES:
1. Install Temporary Silt Fence by first digging trench, driving posts, placing and securing fabric. Then backfill and tamp.
2. Reach length not to exceed 500 feet.
3. The down stream end of the Temporary Silt Fence shall have the last 8' angled up slope.
4. Setback dimensions may vary to fit field conditions.
5. Posts to overlap and fence fabric to fold around each post one full turn. Secure fabric with 4 staples for each post.
6. Posts shall be driven tightly together to prevent potential flow-through of sediment at the joint. The tops of the posts shall be secured to each other with wire.
7. For each end post, fence fabric shall be folded around two posts one full turn and secured with 4 staples.
8. Minimum of 4 staples shall be installed per post. Dimensions shown are typical.
9. Maintenance openings shall be constructed in a manner to ensure that sediment is retained by the temporary silt fence.
10. Joint sections shall not be placed at sump locations.

LEGEND
Tamped backfill
Slope direction
Direction of flow

## TEMPORARY SILT FENCE

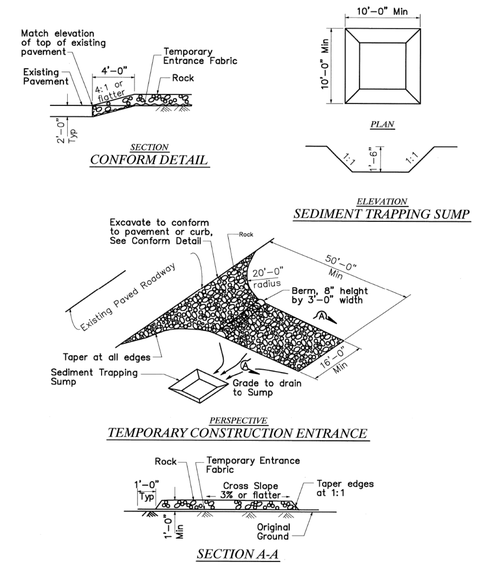


## TEMPORARY CONSTRUCTION ENTRANCE

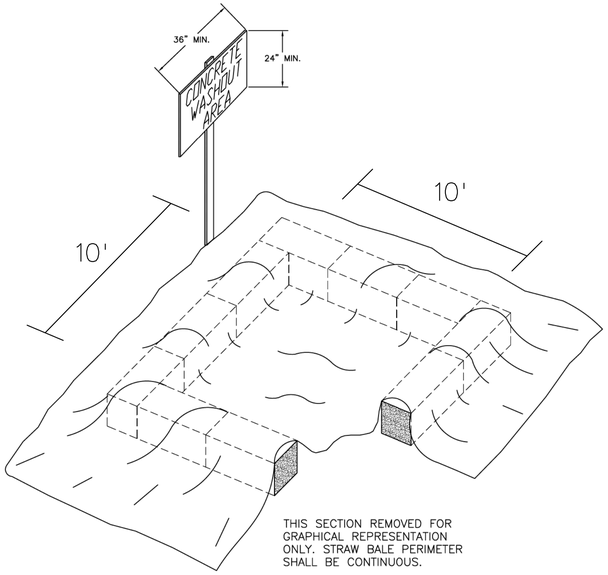


CONCRETE WASHOUT BASIN (A --)
N.T.S.

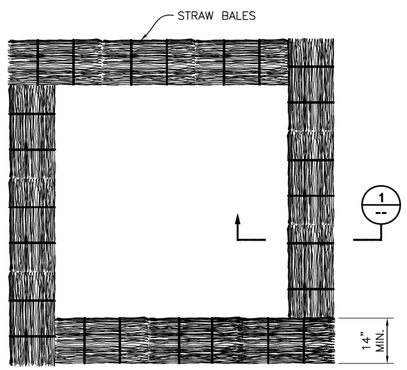


CONCRETE WASHOUT BASIN - PLAN (B --)
N.T.S.

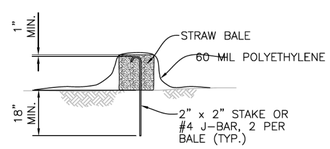


SECTION (1 --)
N.T.S.

NOTES:

1. PROJECT DISTURBANCE IS LESS THAN 1.0 ACRE AND AS SUCH NOT SUBJECT TO THE REQUIREMENTS OF THE STATE OF CALIFORNIA GENERAL PERMIT FOR STORMWATER DISCHARGE ASSOCIATED WITH CONSTRUCTION AND LAND DISTURBANCE ACTIVITIES, REQUIRING BEST MANAGEMENT PRACTICES. HOWEVER, THE CONSTRACTOR SHALL IMPLEMENT BEST MANAGEMENT PRACTICES (BMPs) FOR STORM WATER AND NON-STORM WATER MANAGEMENT.

2. DETAILS ON THIS SHEET ARE PROVIDED AS BEST MANAGEMENT PRACTICES. CONTRACTOR SHALL IMPLEMENT THESE METHODS FOR STORM WATER AND NON-STORM WATER MANAGEMENT FOR THIS PROJECT.

CONSULTING KASL ENGINEERS

murraysmith

FILE: S:\2695-03 Skyway Well\Plan\04_DETAILS.dgn
DATE: 1/22/2020

| | | | | | | |
|---|---|---|---|---|---|---|
| REVIEWED BY: | DATE: | DESIGNED BY: | | | | |
| REVIEWED BY: | DATE: | DRAWN BY: | | | | |
| REVIEWED BY: | DATE: | CHECKED BY: | | | | |
| | | DATE: 1/22/2020 | REV. | DATE | DESCRIPTION | APP. |

FAIR OAKS WATER DISTIRCT
10326 FAIR OAKS BLVD, FAIR OAKS, CA 95628, (916) 967-5723

SKYWAY WELL DRILLING, DEVELOPMENT AND TESTING

**BEST MANAGEMENT PRACTICE DETAILS**

DATE: DATE Jan 2020
SCALE:
HORIZ: N/A
VERT: N/A
VER.:

FAIR OAKS WATER DISTRICT

SHEET G4.0
OF 4 SHEETS 4
PROJECT NUMBER
C19WTSTSTH